ITEM	QTY	PART NUMBER	DESCRIPTION
1	1	U5000826M	CARRIER CHAIN
2	1	U5004799S-002	CARRIER LUG BASE, NARROW RH
3	1	U5004801S-002	CARRIER LUG BASE, WIDE LH (SCR)
4	1	U5004802M-004_REF	CARRIER LUG, 66/211 LH (REF ONLY)
5	2	U6002596P_EXP	M6 HIGH COLLAR LOCK WASHER SS
6	2	U6003063P_EXP	SCREW SHCS, M6x30 SS

QTY REPRESENTS 1 INCREMENT
OF CHAIN ONLY
TOTAL INCREMENTS = 45

REF ONLY. SEE CHANGE PARTS BILL
FOR CARRIER CHAIN LUG PART NUMBERS

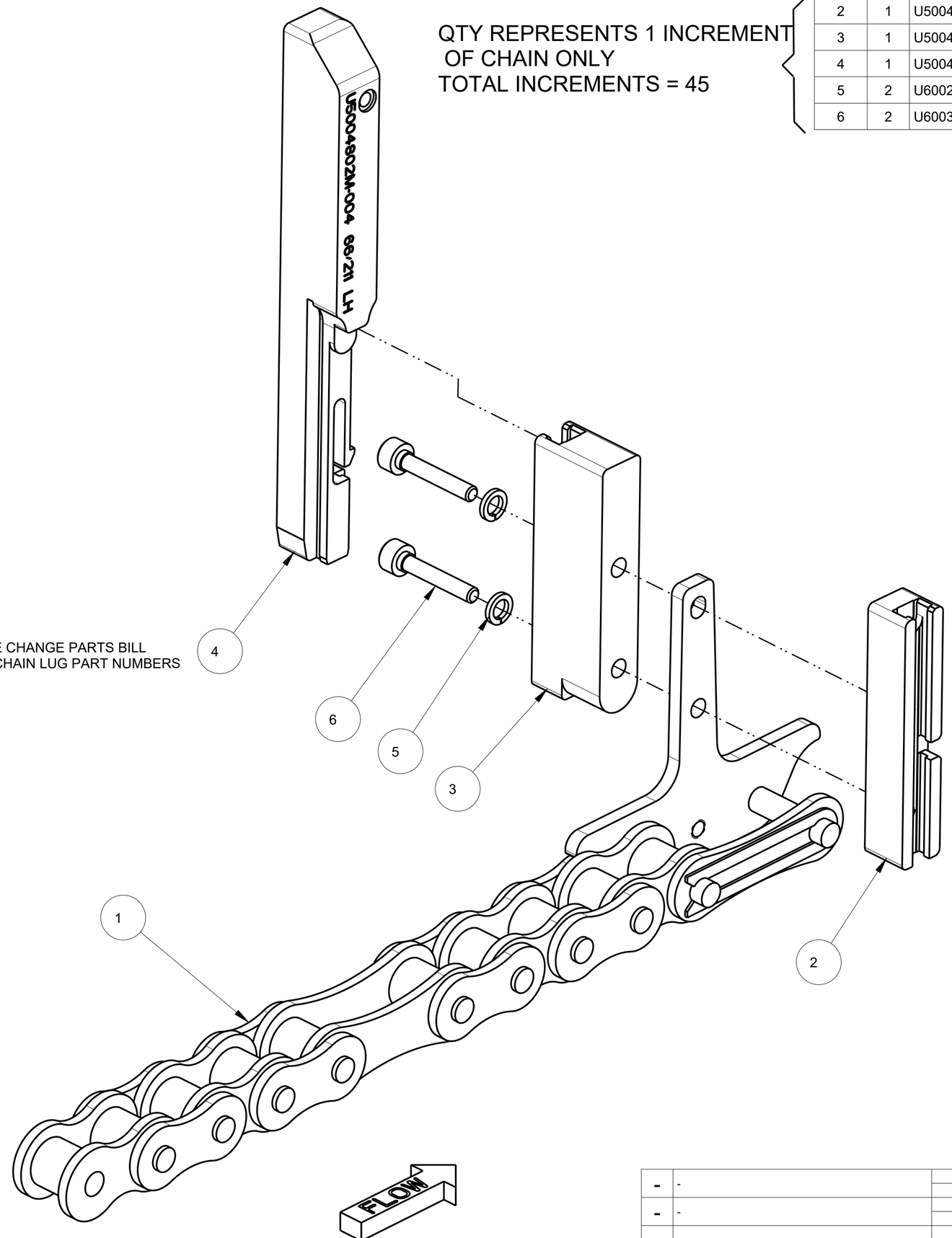

REV.	DESCRIPTION	BY / DATE	CHK'D / DATE
-	-		
-	-		
-	-		
-	-		
-	-		

NOTICE: THIS DRAWING AND ALL DATA, DESIGNS, STRUCTURES AND DESCRIPTIONS SHOWN THEREON ARE OUR PROPERTY. ALL PATENTABLE AND/OR COPYRIGHTABLE MATTER THEREON HAS BEEN PROTECTED BY APPLICATIONS FOR PATENT AND/OR COPYRIGHT. THIS DRAWING IS LOANED FOR A SPECIFIC PURPOSE AND MUST BE RETURNED ON DEMAND, AND MAY NOT BE COPIED, REPRODUCED, OR DUPLICATED IN WHOLE OR IN PART, WITHOUT OUR SPECIFIC AUTHORIZATION IN WRITING.

UNLESS OTHERWISE SPECIFIED: ALL DIMENSIONS MILLIMETER, DO NOT SCALE DRAWING

GENERAL TOLERANCE:
HOLE, SLOT H12
OTHERS js12

CONCENTRICITY ±0.02
PERPENDICULARITY ±0.02/CM
ANGULARITY ±0.25°

BREAK SHARP CORNERS
REMOVE ALL BURRS
FINISHED SURFACES 3.2 √(125)

METRIC

MATERIAL:

FINISH:

DRW BY: JWC	CHK'D :	ENGR. BY : JWC
DATE: 03-May-16	DATE :	DATE : .....

TITLE: ASSY, CARRIER CHAIN #2 RHM

WestRock PACKAGING SYSTEMS ATLANTA, GA, USA

SCALE	MATERIAL CODE	DRW. SIZE	DRW. N°	REV	VER 1	SHEETS
1/1	999	C	U5008780M-003	-		1/1